由 Autodesk 教育版产品制作

REV	MARK	ECN NO.	DESCRIPTION	NAME	DATE
A0	——	————	新图制定		201/0/0

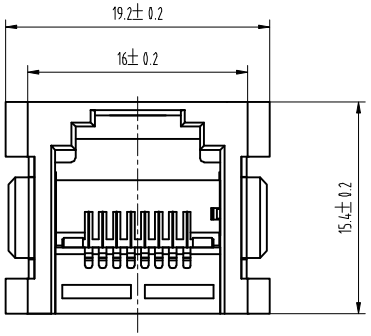

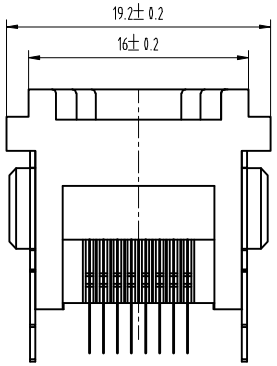

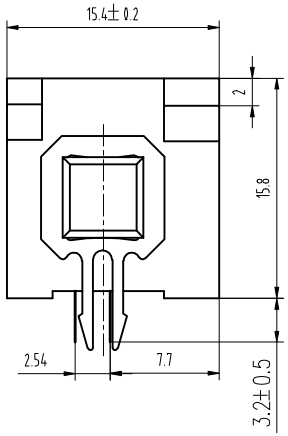

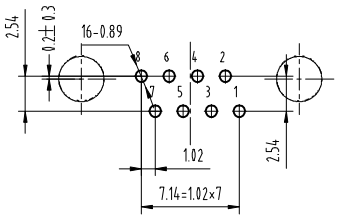

PC Board Layout

Component Side Shown

NOTES:

MATERIAL:

1.HOUSING MATERIAL	:GLASS FILLED POLYESTER UL94V-0.
2.CONTACT MATERIAL	:PHOSPHOR BRONZE Φ0.45mm.
3.PLATING	:GOLD PLATING Fu"~50u" OVER NICKEL.

ELECTRICAL:

1.VOLTAGE RATING	:125 VAC RMS.
2.CURRENT RATING	:1.5 AMP.
3.CONTACT RESISTANCE	:30 MILLIOHMS MAX.
4.INSULATION RESISTANCE	:500 MEGOHMS MIN @ 500V DC .
5.DIELECTRIC WITHSTANDING RESISTANCE	:1000V AC RMS 50Hz. 1MIN.

MECHANICAL:

1. DURRABILITY	:750 CYCLES MIN.
2.PCB RETENTION PRE-SOLDER	:1 LB MIN.

ENVIRONMENTAL:

1. STORAGE	: -40℃~+85℃
2. OPERATION	: 0°C TO 70°C.

TOLERANCE UNLESS OTHERWISE SPEC	
BASIC DIMENSION	TOLERANCE
.X	±0.5
.XX	±0.35
.XXX	±0.25
ANGLES	±0.5°

DESIGNED		SIZE	A4
CHECKED		UNIT	MM
STANDARDIZED		SCALE	1:1
		WEIGHT	
APPROVED		SHEET	第1页共1页
		REV	A

TITLE : 5225-8P8C-1X1-180° 带铁脚

PART NO. :

DRAWING NO. :

Coorle Technology

由 Autodesk 教育版产品制作